Volume II, Issue 4, July/August 2002
Copyright © 2002 Resource Dynamics Corporation

Distributed Generation MONITOR

DG Integrated Solution Providers

Companies have emerged over the last few years that provide full-service DG installation. They help an end user develop a DG solution, select the best technology, obtain all necessary permits, work with the local distribution utility to meet interconnection requirements, and oversee installation of the generator and interconnection equipment. Most integrated solution providers (ISPs) are not traditional utilities, equipment manufacturers, distributors or engineering firms. More likely they are new companies or evolving energy service providers.

In a traditional siting process the customer hires an architecture and engineering (A&E) firm, secures financing, hires a general contractor, hires subcontractors, and then the contractor works closely with the utility. In the emerging process, the customer hires a DG developer or energy service company, and this integrated solution provider arranges the A&E, secures permits, locates financing, oversees construction, and works with the utility.

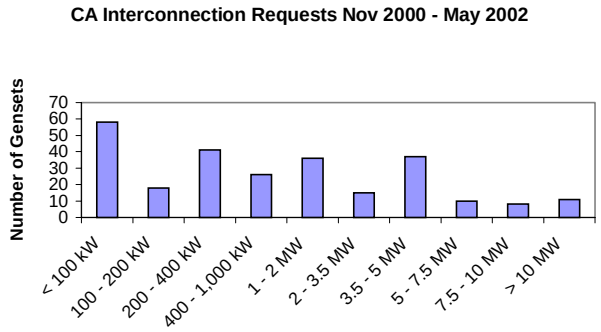

Under California's Rule 21, the three large IOUs in California now report requests for interconnection. The figure above demonstrates the breadth of unit sizes (and by extension, technologies) that are being sited today. While a number of microturbine and fuel cells less than 100 kW are *(continued on page 2)*

The History of DG Installation

Considerable recent publicity about distributed generation suggests that DG is both a new and a growing phenomena in the U.S. This is not true. An analysis of the Energy Information Administration's annual survey of non-utility generators shows that the installation of new distributed generators was greatest between the late 1980s and mid-1990s.

A similar situation exists among those DG units that are used as co-generators (CHP). The installation of many CHP generators occurred during the 1960s, most likely at locations and in industries ideally suited to benefit from CHP. Both the level of electric

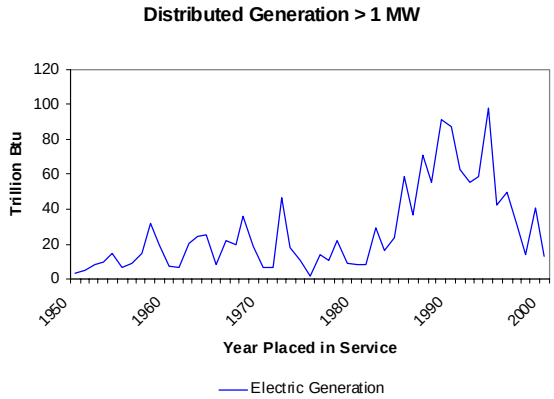

and thermal output during 2000, by the year a given generator was placed *(continued on page 5)*

IN THIS ISSUE

Articles
DG Integrated Solution Providers 1
The History of DG Installation 1
DG Monitor Index 5

Features
Technology Series: State-of-the-Art Interconnection Systems 3
Conferences 4
DG Notes 6

RESOURCE DYNAMICS CORPORATION

To view earlier editions of the DG Monitor or to begin receiving the publication via email please visit: www.distributed-generation.com.

About the DG Monitor The DG Monitor is a bimonthly publication of the Resource Dynamics Corporation covering the many facets of the emerging Distributed Generation marketplace. Articles both report and interpret the most important items. In addition, the Monitor includes special series on DG technologies, applications, manufacturers, and other issues, providing the reader with a complete picture of these topics over several issues.

Comments or requests for additional information can be addressed to DGMonitor@rdcnet.com, through our website at www.distributed-generation.com, or by contacting Jean Connors at 703/356-1300 x 208.

Executive Editor…….. Paul L. Lemar, Jr.
Editor……... Elizabeth A. Kime
ekime@rdcnet.com

The Resource Dynamics Corporation has prepared the information contained herein to the best of their knowledge, but assumes no liability for damages caused by the use of any content.

Distributed Generation Monitor, ©2002 Resource Dynamics Corporation, 8605 Westwood Center Drive, Vienna, Virginia 22182, 703/356-1300.

The **Resource Dynamics Corporation (RDC)** creates business solutions that empower clients to compete effectively in changing energy markets. Often, these involve evaluating the role of new technologies. All senior staff have both business and engineering backgrounds, with a distinct focus on strategy implementation. We combine these strengths to create innovative business solutions for energy technologies and markets. **RDC** utilizes an extensive set of tools including proprietary databases and models to develop these solutions.

We develop business solutions in four areas:

- **Distributed Generation**
- **Marketing for Energy Businesses**
- **Strategies for Power Suppliers**
- **Strategies for Energy Purchasers**

RDC has entered its 23rd year. Meeting our clients' needs has always been our top priority and we have consistently delivered outstanding consulting services to enable our clients to reach their goals. Clients include energy companies, consumers, financial institutions, law firms, equipment vendors, trade associations, research organizations, government agencies and international institutions.

For more information, see www.rdcnet.com.

(ISPs continued from page 1) being installed, there also has been an explosion in the growth of midsize reciprocating engine capacity. ISPs can install many different DG products.

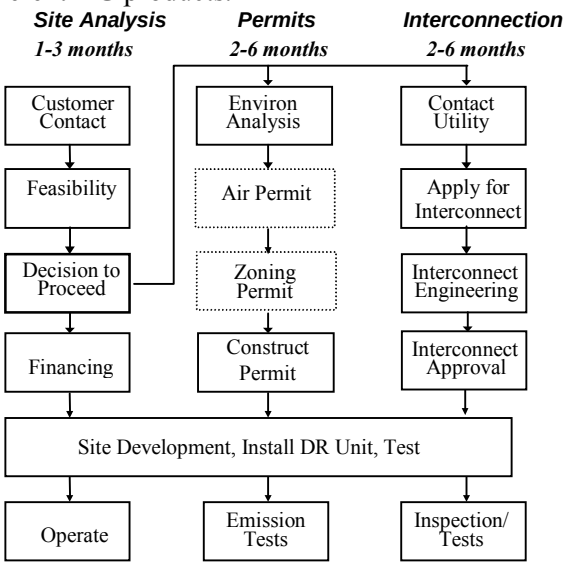

The siting process can be complex, especially for an interconnected unit in a region with air quality constraints. The flow chart provides a simplified overview of steps often taken during DG installation. Integrated solution provider companies oversee this process for the end user. By taking charge and coordinating all the steps ISPs may be able to shorten the installation process from 6 months to 2 months. In doing so, overall project costs may be reduced.

Integrated solution providers are typically found in states that have undergone deregulation (allowing DG projects to proceed and to interconnect with the grid), face high electric grid prices, and face uncertainty as to electric supply reliability. For example, five integrated solution provider companies are noted in the following table. There are other providers in the U.S. and outside the U.S. as well. Additionally, it is worth noting that some ISPs have gone out of business during the last year and new ones are now forming. ■

Integrated Solution Provider	Location	URL
AES NewEnergy	CA	Newenergy.com
Celerity Energy	OR	Celerityenergy.com
NextGen Power Systems	CO	Nextgenpower.com
RealEnergy	CA	Realenergy.com
Valley Energy	CA	Valleyenergyltd.com

DG TECHNOLOGY SERIES: STATE-OF-THE-ART INTERCONNECTION SYSTEMS

The market for distributed generation (DG) continues to evolve. DG units are increasingly being evaluated by residential, commercial, and industrial users as solutions for their energy needs. In addition, the DG retrofit market shows great potential. With energy market restructuring, DG units currently interconnected for standby capability can be retrofitted with new interconnection systems to provide peak shaving, interruptible rate, and export-to-utility functions.

A DG interconnection system is the equipment that makes up the physical link between DG and the EPS, usually the local electric grid. The interconnection system is the means by which the DG unit electrically connects to the outside electrical power system, and provides for monitoring, control, metering, and dispatch of the DG unit. In short, the interconnection devices perform the functions necessary to maintain the safety, power quality, and reliability of the EPS when DGs are connected to it.

Different applications of DG require different levels of interconnection complexity, and most interconnection today is still performed on a site- and DG unit-specific basis. This greatly increases the cost compared with what it would be if the interconnection system were standardized. Beyond this, the lack of standardization of interconnection systems can be confusing for DG users and deter them from interconnecting with the grid.

For these reasons, there has been substantial interest recently in developing a Universal Interconnection Technology (UIT). Development of a UIT would define a standard architecture for functions to be included in the interconnection system. This standard architecture would allow both DG manufacturers and end-users to easily integrate their power systems with the area EPS.

A Universal Interconnection Technology would include at least the following functions:

- Power conversion (if required),
- Power conditioning and quality,
- Protection functions,
- Synchronization,
- DER (both generation and/or storage) and load controls,
- Communications,
- Metering, and
- Dispatch.

Other useful features could include the ability to provide ancillary services to the distribution system and the ability to communicate back to the utility the status of the distribution system.

Underlying development of a UIT are advances in interconnection components through integrated power electronics and microprocessors. Electromechanical "discrete" relays, which dominated utility interconnection, protection, and coordination for years, are being supplanted by digitally based equipment, frequently with multi-function capability. Utilities themselves are gravitating towards digital, programmable relays, raising the issues of field calibration and certification.

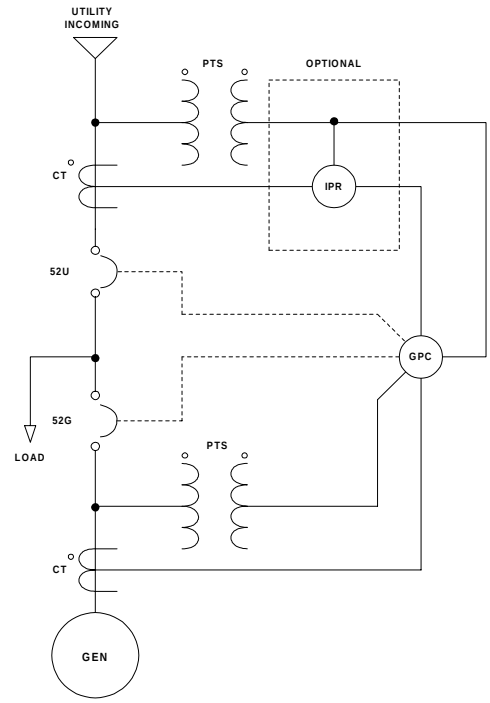

Switchgear Single Line Diagram (Kohler PD-100)

Some manufacturers are assembling systems of components to build complete interconnection systems that meet some *(continued on page 4)*

(Technology series continued from page 3)

of the UIT vision. There are two types of UIT-like systems currently in development; 1) *Traditional non-inverter based pre-engineered systems* that allow for synchronization and parallel operation with the grid. Often these assemblies are referred to as "switchgear", where all the necessary components are built into either panelboards, switchboards or other suitable cabinets; and 2) *Inverter based UIT-like systems* for prime movers with DC or high frequency AC output (i.e. PV systems and fuel cells). These systems can also work with standard induction and synchronous generators. These types of interconnection systems exist for both new DG and for the retrofit of existing DG units of various manufacturers.

Non-inverter based interconnection systems use microprocessor based digital controllers to synchronize and parallel DG unit operation with the grid. Often called "switchgear," these systems are single pre-engineered structures that contain the many functions necessary for synchronization and parallel operation with the grid: operator interface, controls, protective relays, circuit breakers, and much more.

Unlike inverters, these systems are generally used for DG units with more traditional AC output such as reciprocating engines, and do not provide for power conversion with inverters. One goal is to develop switchgear that can be universally applied. Several models on the market have achieved that goal. These units focus on simplified system installation, and work with different styles or brands of generators. These UIT-like systems can be used for new DG units or to transform existing standby units to provide peak shaving, interruptible rate, and export-to-utility functions.

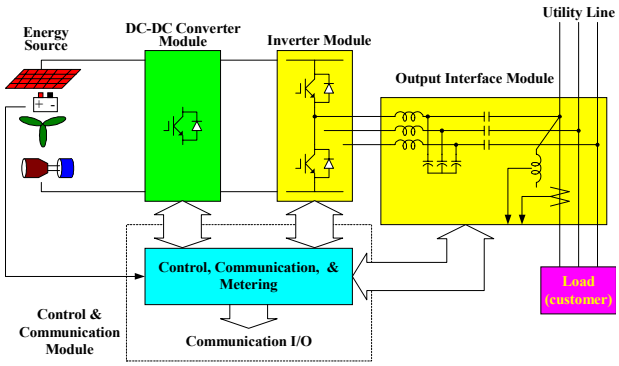

Universal Inverter Modular Building Blocks[1]

The inverter based UIT-like systems are designed for use with prime movers with DC or high frequency AC output (i.e. PV systems, wind, fuel cells, and microturbines). These technologies are expected to increase their share of total power produced in the United States and abroad, setting the stage for inverter based UIT-like systems to interface DC power sources with the grid. Microturbines, which produce high frequency AC, are well suited for use with inverter based UITs since their rectified output (i.e., DC) can be directly fed to the inverter, which then converts it to 60-Hz AC. In the future, inverter based interconnection systems may be applied to standard reciprocating engine gensets. Benefits include higher efficiency and lower emissions at part load. Honda currently manufacturers a 3,000 watt genset whose generator produces 200 volts at 14 to 17 Hz, which is converted to 12 volts DC, and then inverted to 50 or 60 Hz AC. Honda claims a higher power quality than standard gensets. ■

[1] From Ayers, C. W., J. D. Kueck, R. H. Staunton, L. M. Tolbert. "White Paper on the Development of the Universal Inverter for Distributed Energy Resources." Prepared by Oak Ridge National Laboratory, Oak Ridge, Tennessee, December 28, 2001.

CONFERENCES

USCHPA/DOE/EPA 3rd Annual National CHP Roadmap Workshop (www.nemw.org/uschpa/),
Oct. 23-25, 2002, Boston, MA.

CADER & USCHPA Networking DG - Connectivity and Market Access (www.cader.org),
Nov 10-11, 2002, San Diego, CA.

MicroGeneration to PowerParks 2002
(http://www.ipu.msu.edu/MicroGeneration%20Conference.htm),
Sept 22-25, 2002, Detroit, MI

Power-Gen International
(http://pgi2002.events.pennnet.com/home.cfm),
Dec 10-12, 2002, Orlando, FL

DistribuTECH 2003
(http://dt2003.events.pennnet.com/home.cfm)
Feb 4-6, 2003, Las Vegas, NV

The DG Monitor Index[SM]

The DG Monitor Index[SM] was developed to track the share price of companies involved in the DG marketplace. A group of 15 publicly-traded North America-based stocks was selected that reflect the diversity of the DG sector. The following companies are included in the index:

- Active Power
- American Power Conversion
- AstroPower Incorporated
- Ballard Power Systems
- Capstone Turbine
- Caterpillar Incorporated
- Cummins Incorporated
- DTE Energy
- Duke Energy Corp
- Emerson Electric
- PlugPower Incorporated
- Spire Corporation
- United Technologies
- Williams Energy
- Woodward Governor Company

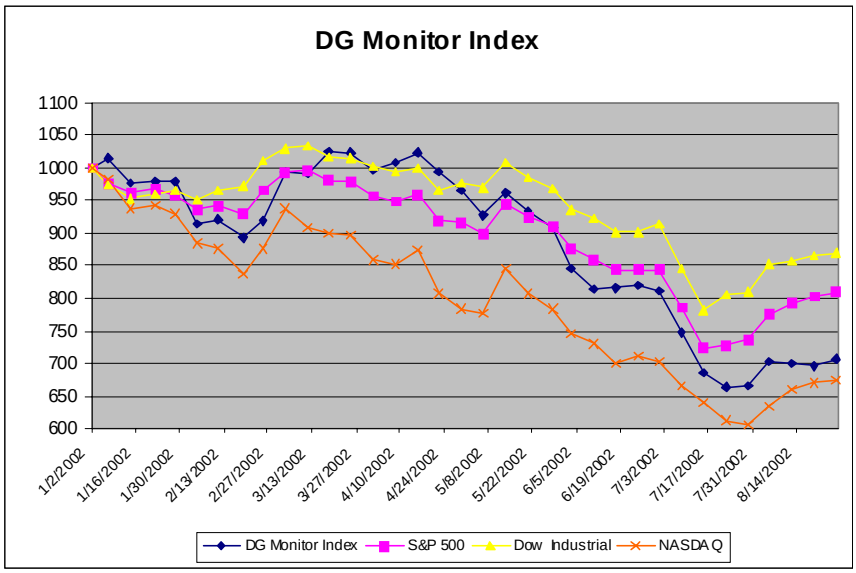

The index is based on the purchase of an equal dollar amount of each stock ($66 2/3) on January 2, 2002, and tracks the cumulative performance of the collection of stocks. Splits and dividends are included in the index. The chart above shows the 2002 performance relative to other stock indexes. The DG Monitor Index[SM] continues to outperform the NASDAQ, while underperforming both the Dow Industrials and S&P 500 indexes in 2002. Only one stock in the DG Monitor Index[SM], DTE Energy, has shown a gain this year. Capstone Turbine and AstroPower Incorporated, two manufacturers of DG equipment, are the worst performers so far in 2002, both down around 75 percent.■

(History, continued from page 1)

in service, provide insight into the pattern.

In either case, the situation does not defend the idea that DG has been either a recent or a growing development. However, these analyses cover only generators greater than 1 MW in size, so it is possible that inclusion of smaller sized DG units will change the picture. The Resource Dynamics Corporation is currently evaluating the size of the entire installed DG base. Results will be available for purchase as a report in the next few months. ■

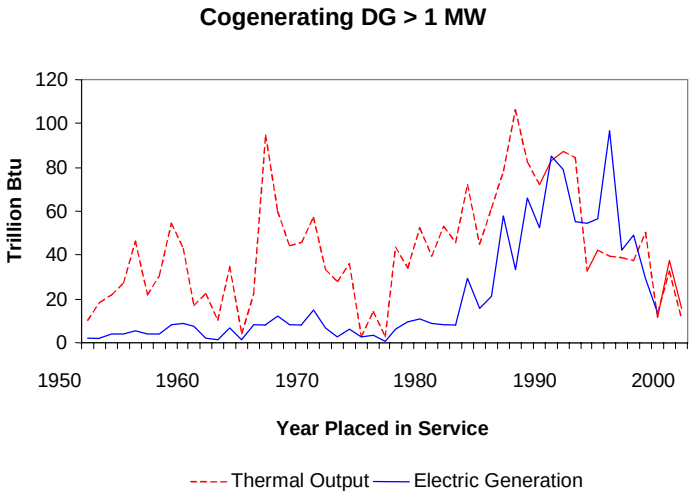

DG NOTES

Aug 26, 2002 - **IdaTech** launched the first of a family of fuel processors to be commercially released, the FPM 20(TM) fuel processor module, designed for simple integration into fuel cell systems or for use as a stand-alone hydrogen generator. The FPM 20(TM) is built on a scalable platform, which enables it to produce enough hydrogen to power fuel cell modules with outputs ranging from 2 to 6 kW.

Aug 19, 2002 – The **Federal Energy Regulatory Commission** proposed standard agreements and procedures for interconnecting small generators. The advanced notice of proposed rulemaking is part of a series of actions designed to streamline and expedite applications and development of needed infrastructure, including small generation and demand response. The proposed small generator interconnection agreements and small generator interconnection procedures for generators of less than 20 MW would be amendments to the open access transmission tariffs of all public utilities that own, operate or control transmission facilities, and are based on existing agreements and procedures already used in several states.

Aug 6, 2002 - **AstroPower** and **The Home Depot(R)** announced that AstroPower's residential solar electric power systems are now being sold through select Home Depot stores in Delaware, New Jersey, and New York. This announcement marks the initial East Coast expansion of the companies' solar power program, which was established in three San Diego stores in Sept. 2001. The systems are being sold and installed under The Home Depot's "At-Home Services" initiative, a full-service program providing product sales, installation, and service.

July 18, 2002 - **Ballard Power Systems** introduced the Ecostar(TM) ES080-42N-S genset, its first high-speed natural gas fueled generator set. Ecostar(TM) can produces 80 kW for standby and back-up power applications, has the highest power density of any genset of its size, and is based on the 4.2L **Ford** V6 natural gas engine. The list price is $15,700, and targeted markets include agricultural, light-industrial and large residential standby applications. On *Aug 8, 2002* **Ballard** and **Ford Power Products** introduced a hydrogen fueled version of the Ecostar(TM), targeted for utilities for peak power applications, that can produce 114 kVA of power at several voltage levels and phase options and is based upon a standard 6.8-liter Ford production engine.

July 16, 2002 - **DTE Energy Technologies** and **STM Power** will provide energy|now(TM) System Operations Center services for monitoring and controlling 50 beta prototype PowerUnits. The PowerUnits, STM Power's 25-kW flagship product based on the STM Stirling-cycle technology, will be installed by the end of the year.

July 8, 2002 - **Global Thermoelectric** completed the assembly and initial testing of three prototype residential 2 kW fuel cell systems as part of its alliance with **Enbridge Inc.** to commercialize residential fuel cell systems. The Company also recently successfully completed, as part of a **U.S. Propane Education and Research Council** US$500,000 grant, developing a 5kW propane proof of concept partial oxidation reformer and demonstrating the ability of Global's SOFC technology to use propane as a feedstock.

June 19, 2002 -The **National Association of Regulatory Utility Commissioners (NARUC)** released a draft of its Model Distributed Generation Interconnection Procedures and Agreement (available on NARUC's web site at www.naruc.org) for public comment. With support from the **Office of Distributed Energy Resources**, NARUC developed this model DG interconnection rule in order to harmonize state approaches to DG interconnection.

June 13, 2002 - The **Institute of Electrical and Electronics Engineers (IEEE)** Standards Board formally approved the standards development project P1614 Guide for Monitoring, Information Exchange and Control of Distributed Resources Interconnected with Electric Power Systems. The guide will provide information to support implementation of the technical requirements for "Monitoring Provisions" in the current draft of P1547 Standard for Interconnecting Distributed Resources with Electric Power Systems.

June 12, 2002 - The **California Energy Commission (CEC)** approved the Distributed Generation Strategic Plan, a document of recommended policies and strategies for the State to consider regarding the subject of distributed generation. The plan is available at: www.energy.ca.gov/distgen